TOTO® CWT4494049CMFGA#MS

SP WASHLET®+ SX Wall-Hung Toilet, 1.28GPF & 0.9GPF

FEATURES

SP Bowl

- DYNAMAX TORNADO FLUSH® system, high efficiency (1.28GPF/0.9GPF)
- CEFIONTECT® ceramic glaze minimizes waste from sticking to porous ceramic surfaces
- Universal Height

WASHLET+ SX

- Concealed supply connection for seamless installation
- Gentle aerated, warm water, dual action spray with adjustable pressure and oscillating pulsating features
- Adjustable variable temperature for spray and seat
- Water PREMIST of bowl before each use
- Automatic air deodorizer
- Convenient slim wireless remote, with illuminated touch pad
- EWATER+® auto-cleans wand
- Auto Flush

DuoFit In-Wall Tank

- Dual flushing system, high-efficiency (1.28 GPF/4.8 LPF & 0.9 GPF/3.4 LPF) Avg. flush 1.1 GPF
- Adjustable 15"-19" mounting height
- Saves up to 9" of floor space compared to standard floor-mounted toilet
- Supports up to 880lbs
- Commercial 2" x 6" or optional residential installation with 2" x 4" wall studs with waste outlet kit

KIT COMPONENTS

- CT449CFGT60#01
  SP Wall-Hung Toilet
- SW4049AT60#01
  WASHLET+ SX
- WT173MA
  In-Wall Tank System (1.28 GPF/0.9 GPF)
- YT920#MS
  Matte Silver Basic Square Push Plate

Available Options

- YT920#WH - White Matte Basic Square Push Plate
- YT930#WH - White Matte Basic Round Push Plate
- YT930#MS - Matte Silver Basic Round Push Plate
- YT970#SS - Stainless Steel Wall Round Push Plate
- YT980#SS - Stainless Steel Wall Square Push Plate

COLORS/FINISHES

- Standard
  #01 Cotton

DYNAMAX TORNADO FLUSH **CEFIONTECT**

Auto Flush **EWATER+**

PRODUCT SPECIFICATION

The two-piece high efficiency DYNAMAX TORNADO FLUSH system toilet shall be 1.0 GPF/3.8 LPF. Toilet shall have high profile tank, elongated front bowl and chrome trip lever. Toilet shall be universal height CST449CFG model shall have CEFIONTECT ceramic glaze. Toilet shall be TOTO Model CST449CFG_____.

CODES/STANDARDS

- Meets and exceeds ASME A112.19.2/CSA B45.1
- Certifications: IAPMO (cUPC), EPA WaterSense, State of Massachusetts, City of Los Angeles, and others
- Code Compliance: UPC, IPC, NSPC, NPC Canada, and others
- Legislative Compliance: California AB715, California Green Building Code, City of Los Angeles Water Efficiency Ordinance
- ADA compliant

CWT4494049CMFGA#MS

SP WASHLET®+ SX Wall-Hung Toilet, 1.28GPF & 0.9GPF

SPECIFICATIONS & INSTALLATION NOTES

	SW4049AT60
Power Rating	AC 120V-60Hz, 1282W
Power Cord	2.95 ft/120 cm Length 3 Wire / 4 Pin Plug Harness
Water Feature (Flow Rates)	Front: 9.8-14.5 oz/min
	Rear: 9.1-14.5 oz/min
	Front: 9.8-14.5 oz/min
	Soft Rear: 9.8-14.5 oz min
Washing Spray Temp.	Min: 86°F/30°C Max: 104°F/40°C
Safety Device	Thermal Fuse
Seat Warming Temp.	Min: 82°F/28°C Max: 97°F/36°C
Water Supply Pressure	Min: 7.25 psi Max: 108.75 psi
Ambient Temp.	Min: 32°F/0°C Max: 104°F/40°C
Warranty	One Year Limited Warranty
Shipping Weight	18 lbs.
Shipping Dimensions	26"L x 17" W x 9-3/4" H

	CT449FGT60	WT173MA
Water Use	1.28 GPF & 0.9 GPF (4.8 LPF & 3.4 LPF)	1.28 GPF & 0.9 GPF (4.8 LPF & 3.4 LPF)
Flush System	DYNAMAX TORNADO FLUSH®	Dual-Max®
Min. Water Pressure	8 psi (static)	8 psi (static)
Water Surface	5-1/2" X 4-1/8"	
Trap Diameter	2-1/8"	
Installation Height	15" to 19"	15" to 19"
Trap Seal	2-1/8"	
Warranty	One Year Limited Warranty	One Year Limited Warranty
Material	Vitreous China	Various
Shipping Weight	68 lbs.	43 lbs
Shipping Dimensions	22" x 14.6" x 16.5"	47-1/2" x 26" x 6"

RX WASHLET

- WASHLET SX may not fit certain toilet bowl designs
- If possible, with your order, please include your model number (from the underside of the tank lid)
- It is highly recommended to use a surge protector to prevent damage in the event of a power surge

DuoFit In-Wall Tank

- Adequate structural bracing is required

DIMENSIONS

CT447CFGT60

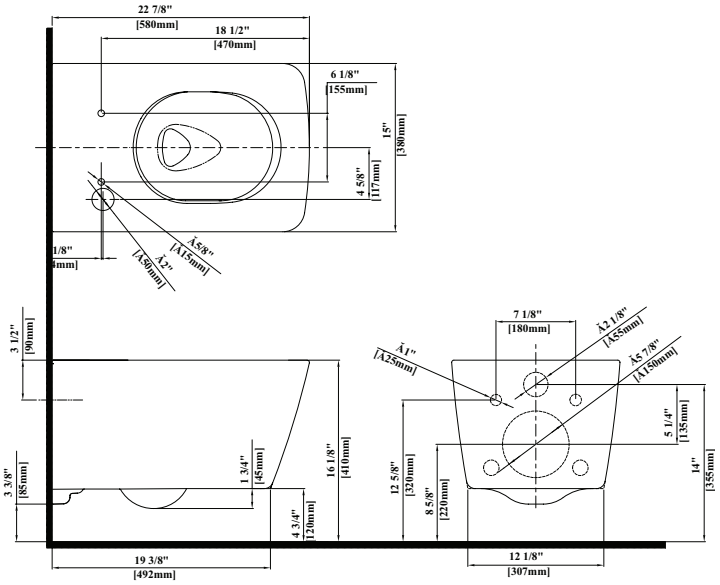

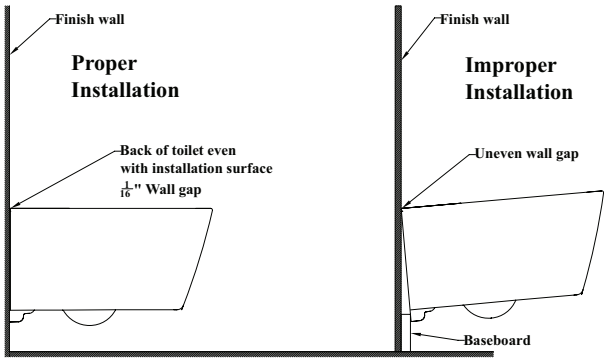

CWT4494049CMFGA#MS

SP WASHLET®+ SX Wall-Hung Toilet, 1.28GPF & 0.9GPF

YT920

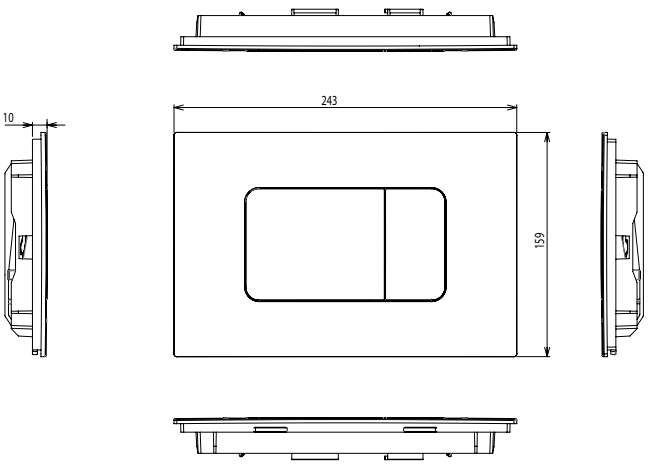

PRODUCT SPECIFICATIONS

- This product is designed and evaluated based on the laws and technical standards of the Territory. Use outside the Territory may compromise safety and performance or violate local laws. Warranty, repairs, and technical support are not available for use outside the Territory.
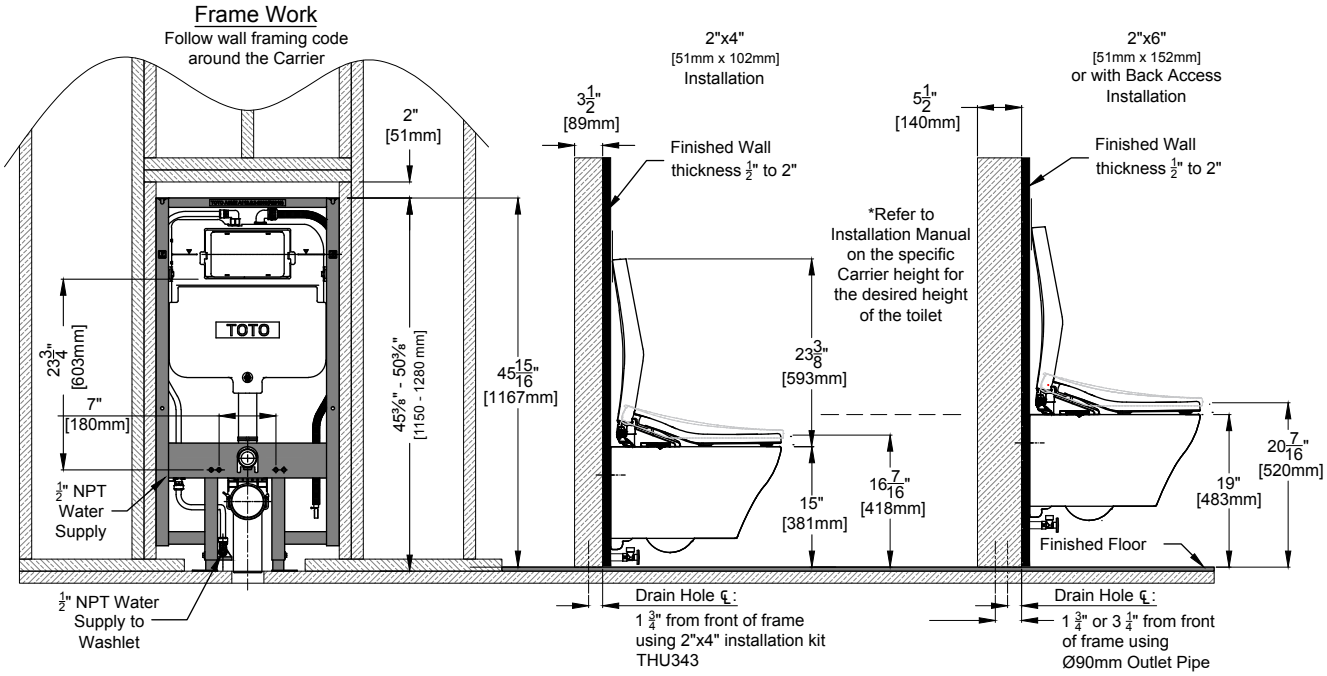
WT173MA