TOTO®

T26S32 Series

Helix® Touchless Faucet

FEATURES

- The choice of self-generating hydropowered ECOPOWER® system or AC system
- Micro-sensor positioned underneath the spout head provides accurate hand detection and ensures smooth, consistent water distribution
- Vandal resistant nozzle
- Aerated flow
- Durable chrome plated spout body
- Kit includes spout body, controller box, and mounting hardware (supply lines not included)
- 0.35 gpm aerated flow
- Contributes to earning LEED® credits
- Equipped with 0.35 gpm flow control. 0.12 gpc, 20 sec on-demand flow

ECOPOWER or AC SYSTEM

MODELS

☐ **T26S32E#$$**
- TLE26001U2#$$ (Helix Spout 20 sec on-demand)
- TLE03501U2 (Controller: ECOPOWER, 0.12 gpc, 20 sec on-demand)

☐ **T26S32EM#$$**
- TLE26001U2#$$ (Helix Spout 20 sec on-demand)
- TLE03501U2 (Controller: ECOPOWER, 0.12 gpc, 20 sec on-demand)
- TLM10 (Mixing Valve)

☐ **T26S32ET#$$**
- TLE26001U2#$$ (Helix Spout 20 sec on-demand)
- TLE03501U2 (Controller: ECOPOWER, 0.12 gpc, 20 sec on-demand)
- TLE05701U (Thermostatic Mixing Valve)

☐ **T26S32A#$$**
- TLE26001U2#$$ (Helix Spout 20 sec on-demand)
- TLE01501U (Controller: AC, 0.12 gpc)

☐ **T26S32AM#$$**
- TLE26001U2#$$ (Helix Spout 20 sec on-demand)
- TLE01501U (Controller: AC, 0.12 gpc)
- TLM10 (Mixing Valve)

☐ **T26S32AT#$$**
- TLE26001U2#$$ (Helix Spout 20 sec on-demand)
- TLE01501U (Controller: AC, 0.12 gpc)
- TLE05701U (Thermostatic Mixing Valve)

COLORS/FINISHES

- #CP Polished Chrome

OPTIONAL ACCESSORIES

- THP3158#CP - 4" Cover Plate
- THP3159#CP - 8" Cover Plate
- THP3237 - Swivel Coupling

PRODUCT SPECIFICATION

TOTO Model #_____ Choice of self-generating hydropowered ECOPOWER system or AC system. The faucet shall have maximum of 20 seconds on-demand flow (0.12 gpc). The faucet shall have self-adjusting sensor. Product equipped with 0.35 gpm flow regulator.

CODES/STANDARDS

- Operates below federally mandated consumption limit of 0.25 gpc
- Complies to California Green Building Code, CALGreen max flow of 0.20 gpc
- Meets or exceeds ASME A112.18.1/CSA B125.1, and NSF 372
- Meets or exceeds UL 1951, CSA C22.2 No.14 and 68 (AC systems only)
- Certifications: IAPMO(cUPC), California Energy Commission (CEC), State of Massachusetts, and others
- Complies with City of Los Angeles Water Efficiency Ordinance
- ADA compliant
- Complies with Federal and State statutes as low-lead (contains a weighted average of 0.25% lead or less)
- Complies with CA Prop 65 warning requirements

LOW-LEAD UPC C ®
ECOPOWER only

NRTL IAPMO EGS C US cUPC® LOW-LEAD
AC systems only

**For codes and standards of mixing valves TLM10 and TLE05701U, please refer to corresponding product spec sheet*

T26S32 Series

Helix® Touchless Faucet

SPECIFICATIONS

Type	ECOPOWER	AC
Power Supply	Hydropower Generation (self-powering power supply)	AC 120V
Sensor Detection Range	5-1/8" ~ 7-7/8" (130 ~ 200 mm) Sensor is self-adjusting	
Water Supply Pressure	Min (Dynamic/Flowing) Pressure: 15 psi (100 kPa) Max (Static) Pressure: 80 psi (551 kPa)	
Water Supply	G 1/2" (1/2" NPSM compatible)	
Inlet Temperature Range	39-110°F (4-43°C)	
Ambient Temperature	32-104°F (0-40°C)	
Humidity	Max. 90% RH	
Flow Rate	0.12 gpc (0.44 Lpc)** - max 20 second On Demand*** (0.12 gpc = 0.35 gpm x 20/60 sec) Equipped with 0.35 gpm flow control	
Warranty	Three years	

NOTE

Following the federal mandate for water efficiency outlined in the Environmental Protection Act of 1992, faucets can be rated for water consumption based on two categories: Flow Rate and Water Consumption. TOTO uses the water consumption standard because it is the most accurate method of measuring water use. TOTO faucets also comply with the CALGreen Guideline of water usage.|

Water Savings

TOTO On-Demand [20 sec.] faucet (0.12 gpc):
52% savings over Federal Standard (0.25 gpc)
40% savings over CAL Green (0.20 gpc)

**Gallons per cycle (gpc) is the amount of water discharged per usage cycle.
*** On-demand refers to the way in which the water is dispensed (i.e.; water is only dispensed when the sensor is activated by the user as needed).

Helix Touchless Faucet

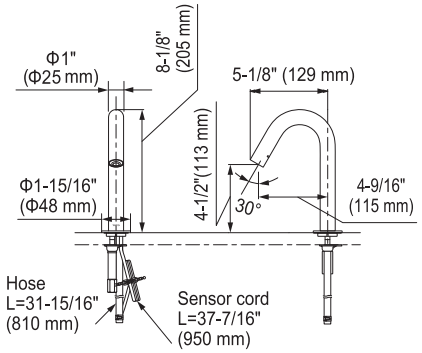

■Mounting deck thickness: 1/4" (5 mm) - 2" (50 mm)
■Spout hole: Ø1-1/4" (Ø32 mm) - Ø1-3/8" (Ø35 mm)

Available Mixing Valves

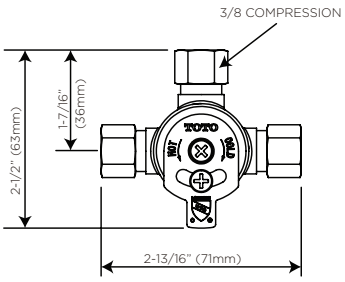

Hot/Cold Mixing Tee (TLM10)

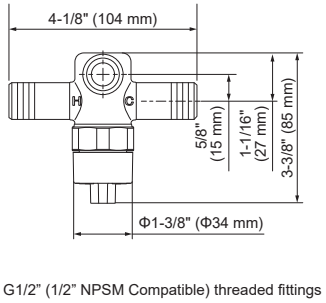

Thermostatic Mixing Valve (TLE05701U)

ECOPOWER Controller

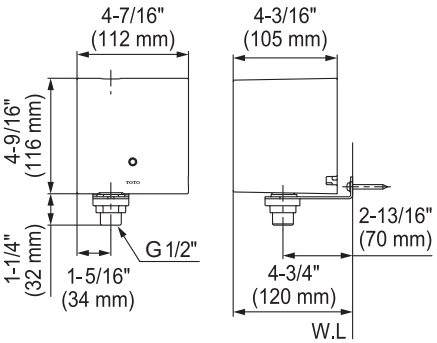

AC Controller

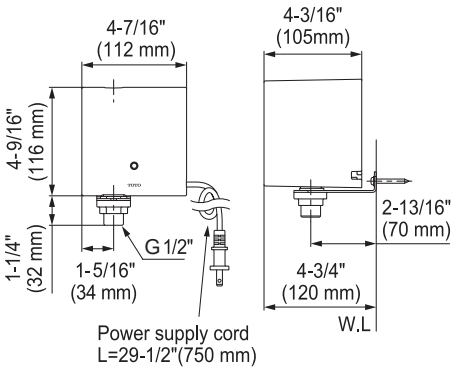

TOTO®

These dimensions and specifications are subject to change without notice