TOTO®

SW3445

WASHLET® S5 ROUND

FEATURES

- High-tech electronic bidet seat
- EWATER+® auto-cleans wand after every use
- PREMIST® automatically mists the bowl before each use
- Self-cleaning wand cleans itself inside and out before and after every use
- CLEAN RESIN® keeps wand and seat cleaner, more hygienic, and effortless to maintain
- Gentle aerated, warm water, front and rear spray with oscillating and pulsating features
- Adjustable spray position, water temperature, and water pressure
- Instantaneous water heater for continuous warm water and energy savings
- Warm air dryer with three variable temperature settings
- Automatic air deodorizer
- Multifunction remote control with personalized memory settings for up to 4 users
- Heated seat with temperature control
- Seamless seat design eliminates the gap where dirt collects
- SoftClose® seat
- Docking station for easy cleaning and installation
- Night light illuminates the inside of the bowl
- Auto energy saver mode adjusts the seat temperature when inactive
- Compatible with most round toilets

MODELS

- SW3445#01 - Cotton

COLORS/FINISHES

- #01 Cotton

PRODUCT SPECIFICATION

Seat shall have gentle aerated, warm water, dual action spray with cycling movement and massage feature. Seat shall have adjustable water temperature and volume. Seat shall have warm air drying with three variable temperature settings. Seat shall have automatic air deodorizer. Seat shall include wireless remote control. Seat shall be solid plastic with closed front seat and cover. Seat shall include power cord, and water supply hoses. EWATER+ cleans the wand. Seat shall be model SW3445#____.

WASHLET. EWATER+ PREMIST

CODES/STANDARDS

- Meets and exceeds ASME A112.4.2, ASME A112.18.1/CSA B125.1, UL 1431, CSA C22.2 #68 and back siphonage testing to ASSE 1001 and CSA B64.1.1
- Certifications: IAPMO(cUPC), State of Massachusetts, City of Los Angeles and others
- Code Compliance: UPC, IPC, NSPC, NPC Canada, and others
- Complies with CA Prop 65 warning requirements

NRTL IAPMO EGS C US cUPC®

SW3445

WASHLET® S5
ROUND

SPECIFICATIONS

Power Rating	AC 120 V, 60 Hz
Power Consumption	1271 W
Max Power Consumption	1425 W
Power Cord Length	3.9 ft (1.2m)
Spray Volume	Rear Cleansing: 0.07 – 0.11 gal/min Rear Soft Cleansing: 0.07 – 0.11 gal/min Front Cleansing: 0.08 – 0.11 gal/min
Spray Features	Adjustable Surface Temp: 95°F - 104°F (35°C - 40°C) Safety Device: Temperature Fuse
Warm Air Dryer Features	Adjustable Air Temp: 95°F - 140°F (35°C - 60°C) Airflow Volume: 8.83 ft3/min Safety Device: Temperature Fuse
Heated Seat Features	Adjustable Surface Temp: 82°F - 97°F (28°C - 36°C) Safety Device: Temperature Fuse
Water Supply Pressure	Minimum: 7.25 PSI (Flowing) Maximum: 108.75 PSI (Static)
Ambient Temp.	32°F - 104°F (0°C - 40°C)
Warranty	One Year Limited Warranty
Shipping Weight	SW3445: 15.2 lbs
Shipping Dimensions	SW3445: 24-3/8" L x 17-9/16" W x 7-7/16" H

INSTALLATION NOTES

- For use with potable water only. Do not use with recycled water.
- It is highly recommended to use a surge protector to prevent damage in the event of a power surge.
- The following factors may affect IR signal strength and top unit operation: product and remote control location, room size, shape, construction materials, and degree of darkness (color) of ceiling and walls.
- This product is designed and evaluated based on the laws and technical standards of the Territory. Use outside the Territory may compromise safety and performance or violate local laws. Warranty, repairs, and technical

DIMENSIONS

SW3445

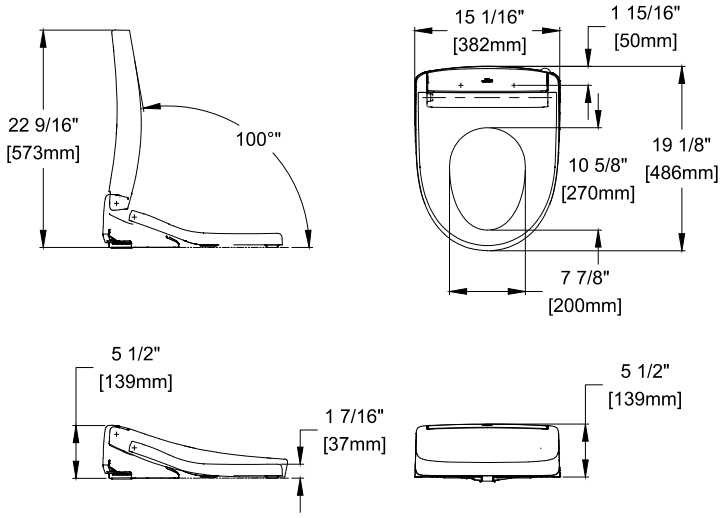

GFCI outlet of 120V, 15amps.
Power cord is 4' long with 3 prongs.